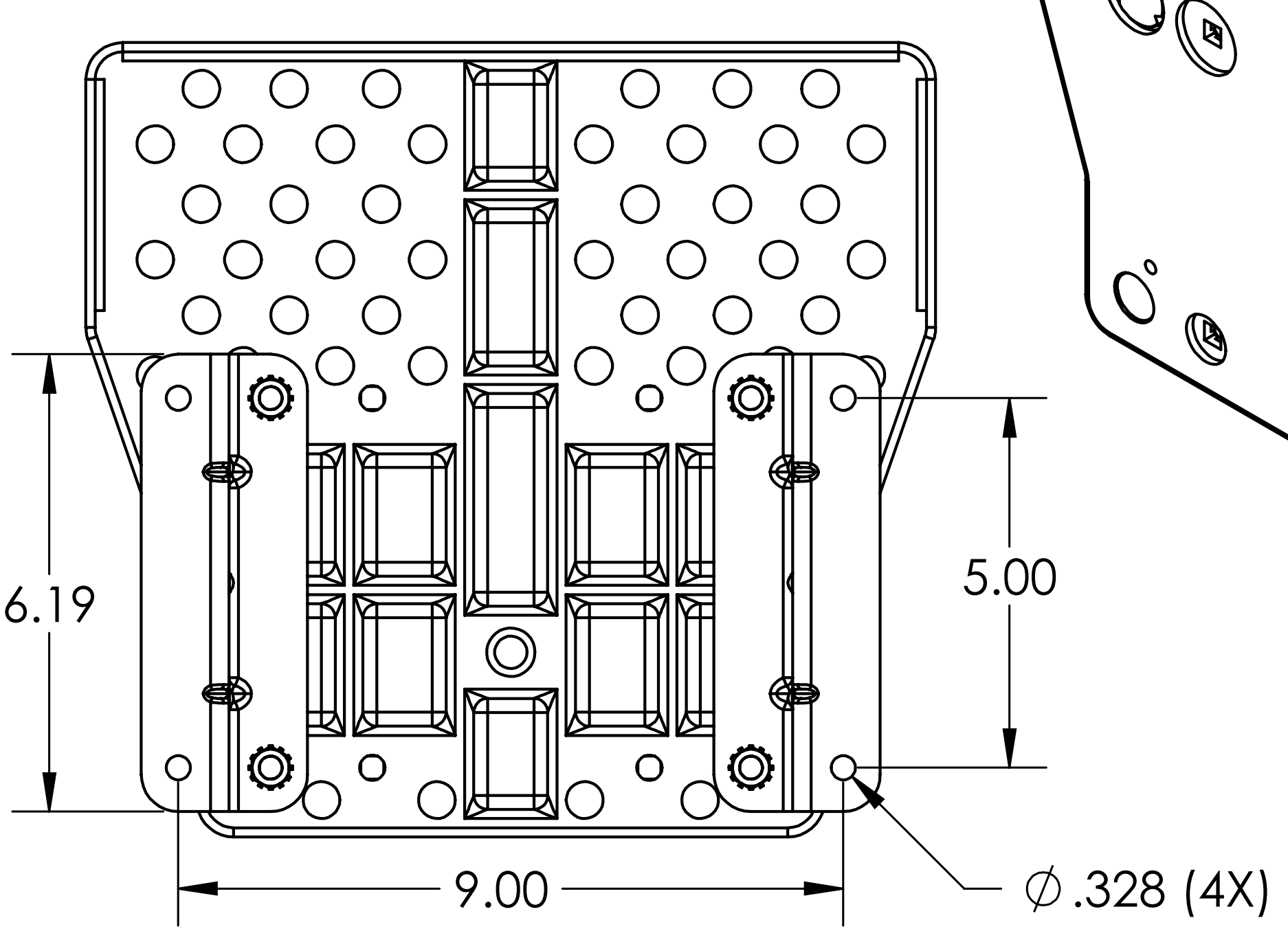
6.19
5.00
9.00
∅ .328 (4X)