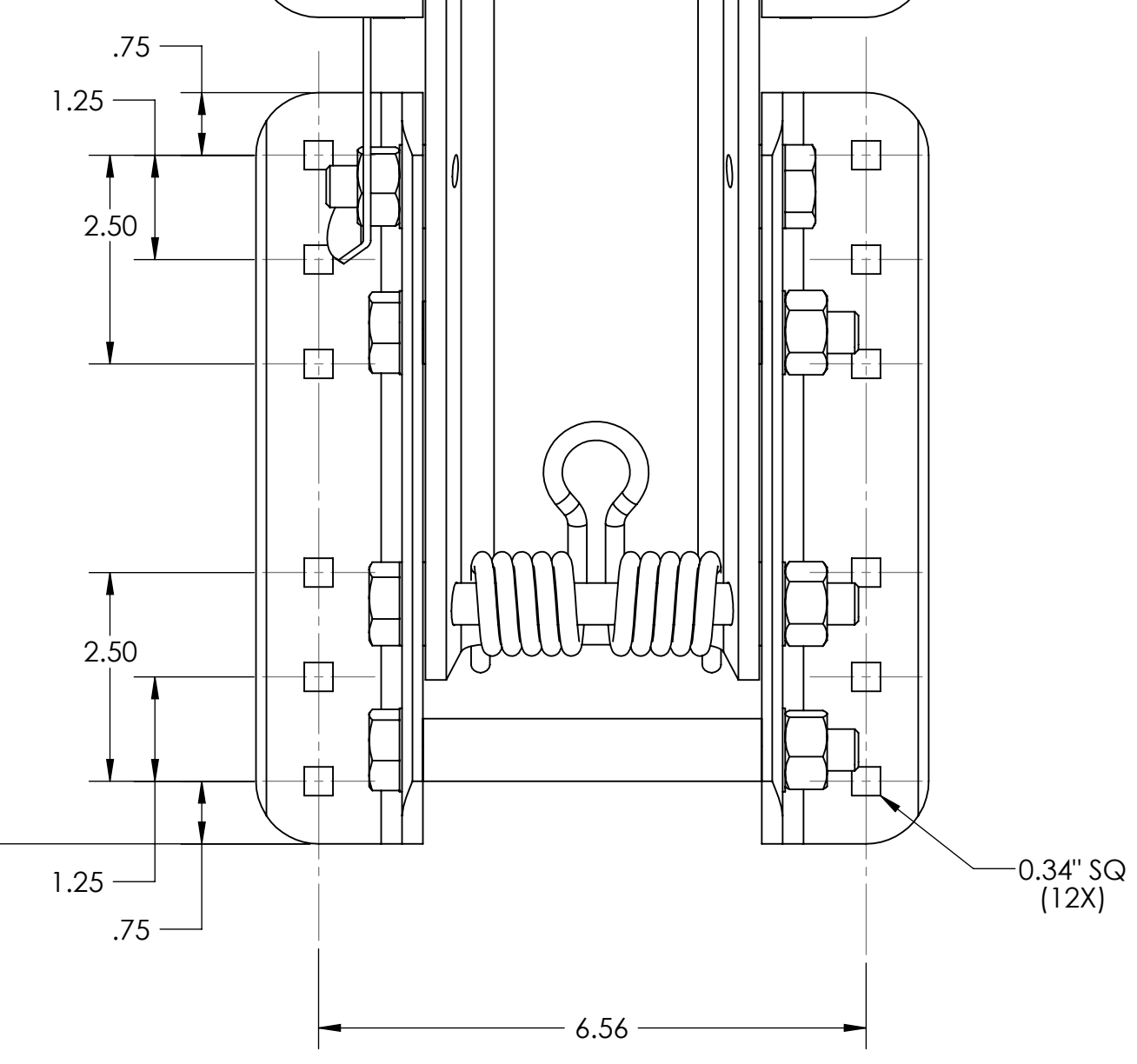
.75
1.25
2.50
2.50
1.25
.75
0.34" SQ
(12X)
6.56